Tiger VALVES/FITTINGS

5 WAY BALL VALVE

THIS DRAWING IS THE PROPERTY OF "M/S.SWASTIK ENGINEERING WORKS" THE BRAND NAME Tiger .THIS DRAWING SHOULD NOT BE COPIED,TRACED & LOAD BY ANY PURPOSE BY ANY FIRM WITHOUT GETTING PERMISSION IN WRITING FROM "M/S.SWASTIK ENGINEERING WORKS" THIS DRAWING SHOULD BE RETURNED BACK TO "M/S.SWASTIK ENGINEERING WORKS" IN ORIGINAL.

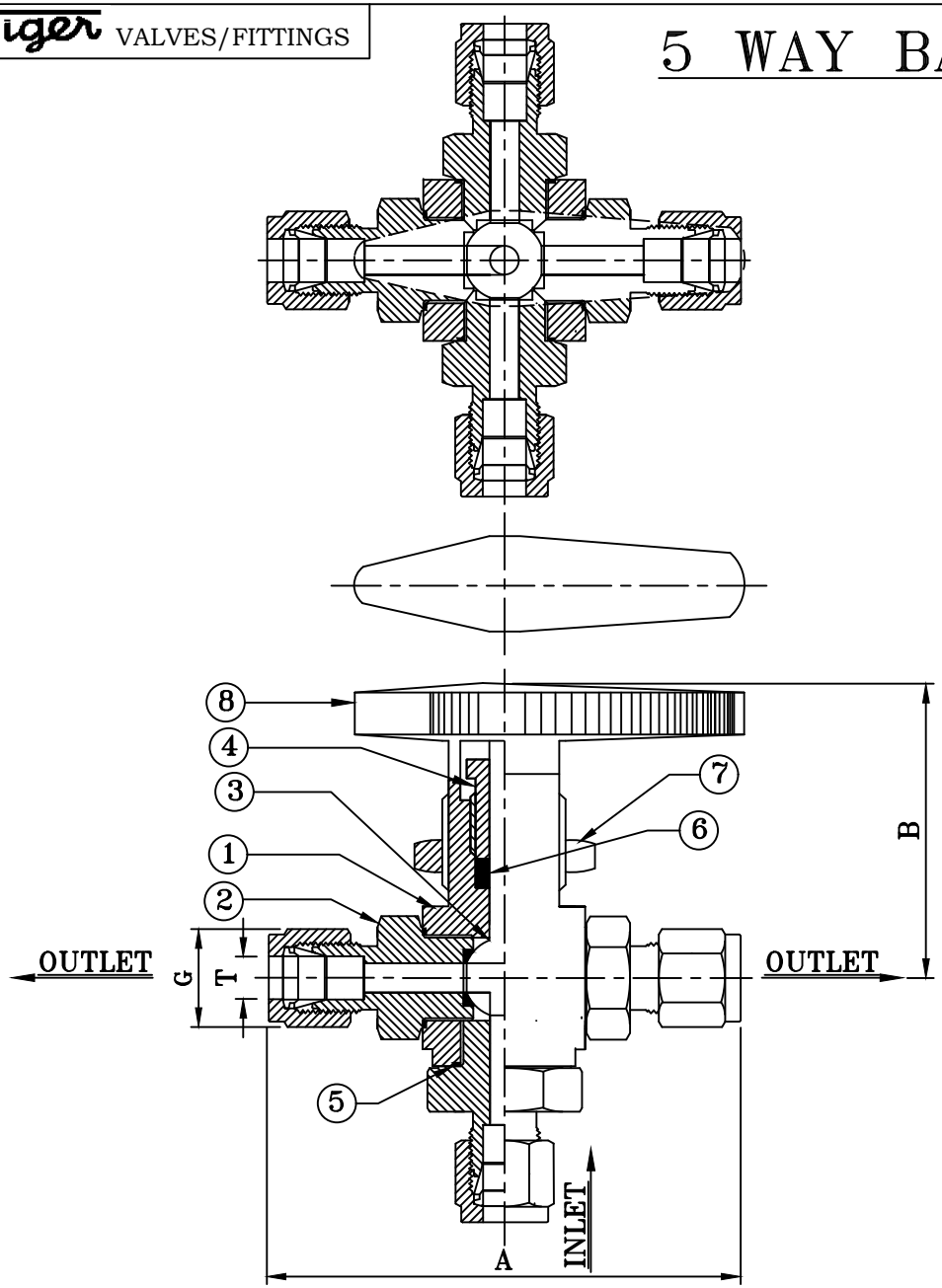

SR.NO	DESCRIPTION	QTY	MATERIALS
8.	HANDLE	1	ABS
7.	PANEL NUT	1	A276 TYPE 304/304L/316/316L
6.	GLAND BUSH	1	P.T.F.E/TEFLON
5.	PACKING	5	P.T.F.E/TEFLON
4.	GLAND NUT	1	A276 TYPE 304/304L/316/316L
3.	BALL	1	A276 TYPE 304/304L/316/316L
2.	ADAPTORS	5	A276 TYPE 304/304L/316/316L
1.	BODY	1	A276 TYPE 304/304L/316/316L

BILL OF MATERIAL

5 WAY BALL VALVE (OD TYPE)					
PART NO	SIZE	T (OD)	A	B	G
5WBV4T	1/4"	1/4"	61.4	42.0	14.2
5WBV6T	3/8"	3/8"			17.5
5WBV8T	1/2"	1/2"			22.2

NOTES:
1) ALL DIMENSIONS ARE IN MM. UNLESS SPECIFIED.
2) PARTS TO BE FREE FROM BURR.
3) GENERAL TOLERANCE : ± 1MM.
4) REF. STD. : ASTM F1387.

TEST PRESSURE		
AIR TEST		7 Kg/Cm²
HYDRO TEST	BODY	210 Kg/Cm²
	SEAT	151 Kg/Cm²

NO	DESCRIPTION	SIGN	DATE

REVISION

	DATE	BY
DRAWN	01.04.10	AL
CHECKED		
APPROVAL		

SCALE : NTS

CUSTOMER :

TITLE : 5 WAY BALL VALVE, ODT END

Swastik Engg.Works
GOREGAON (EAST), MUMBAI-400 063.

MATERIAL : | DWG. NO: SEW-5BV-T | REV.: